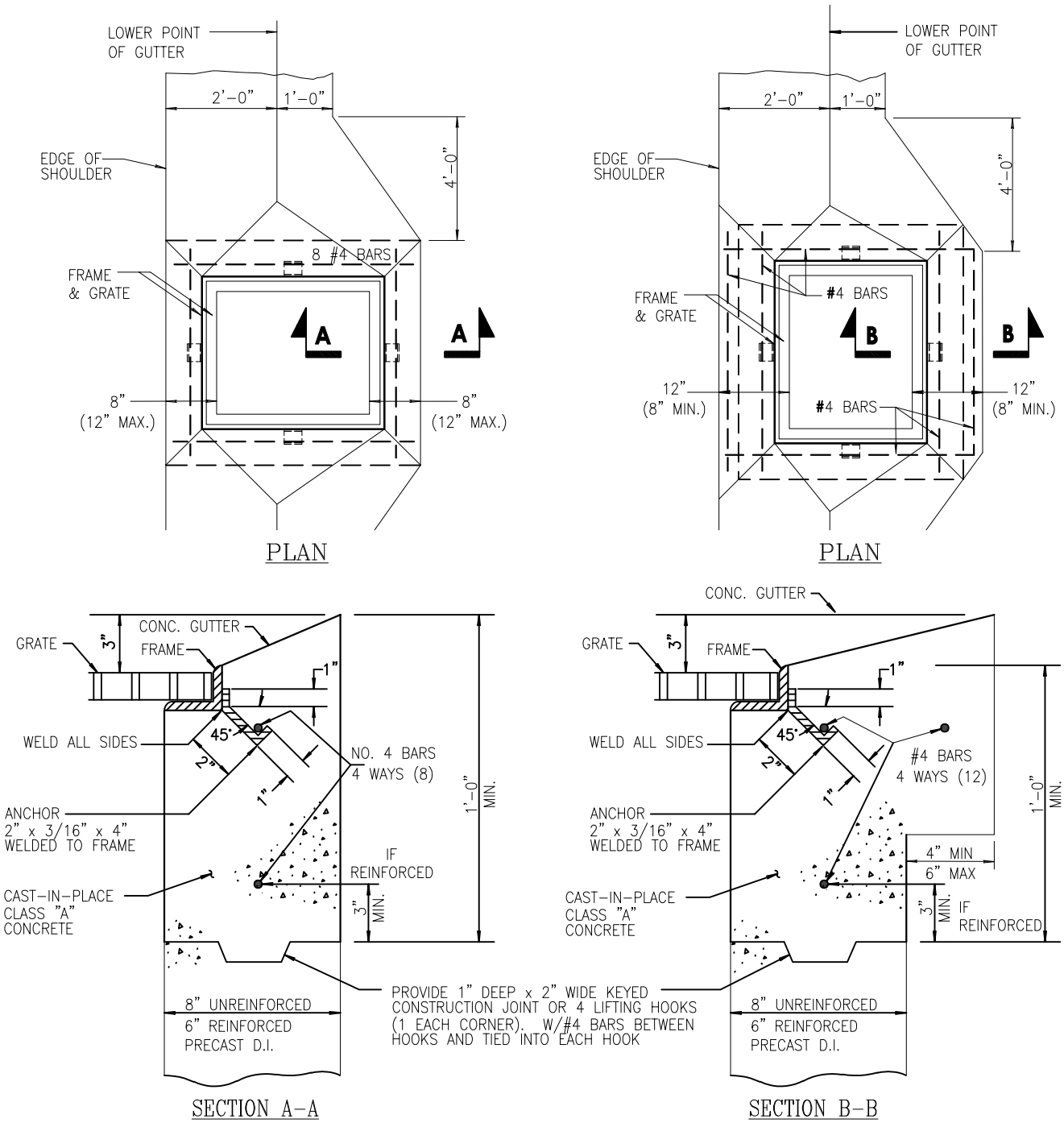


# D.I. CAP ADJUSTMENT IN GUTTER SECTION

NOT TO SCALE - REVISED: 06/12/23